Dimensions and Drawing

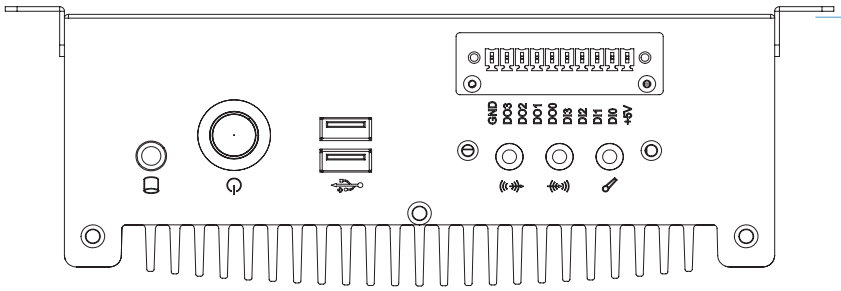

Features
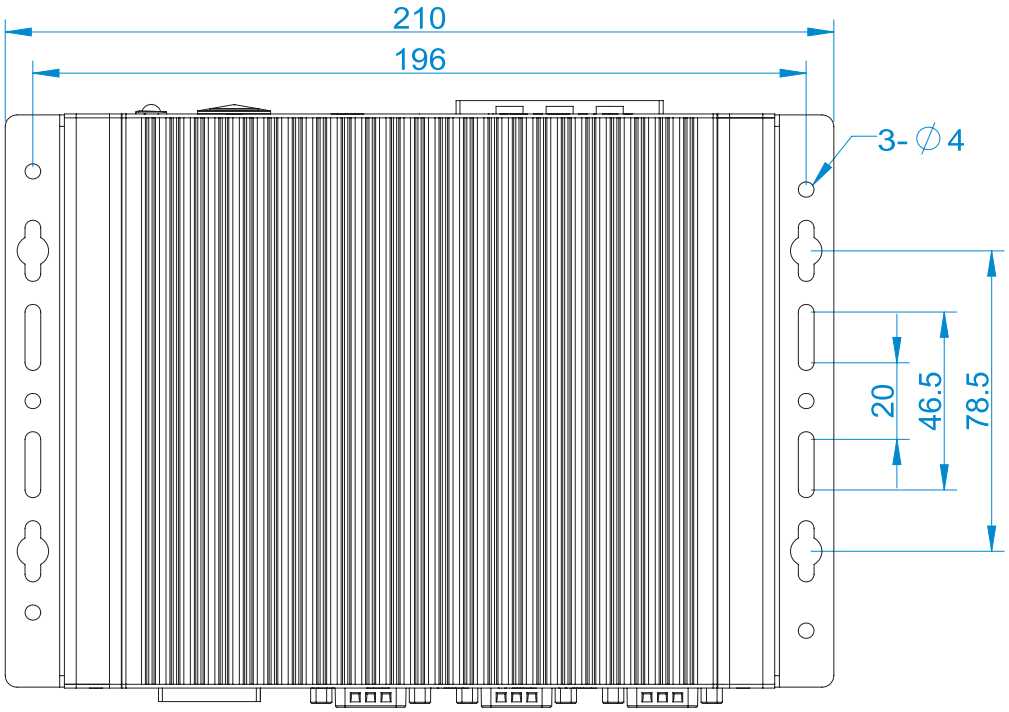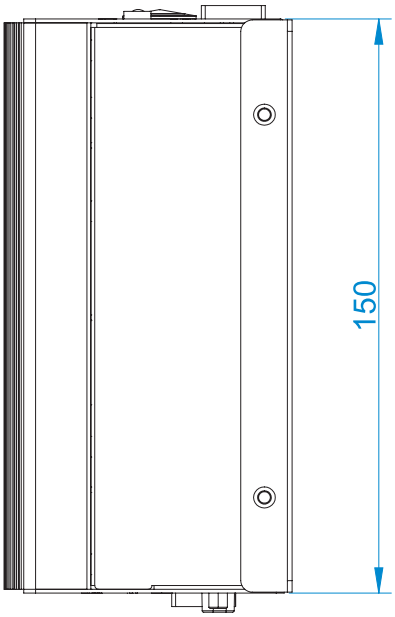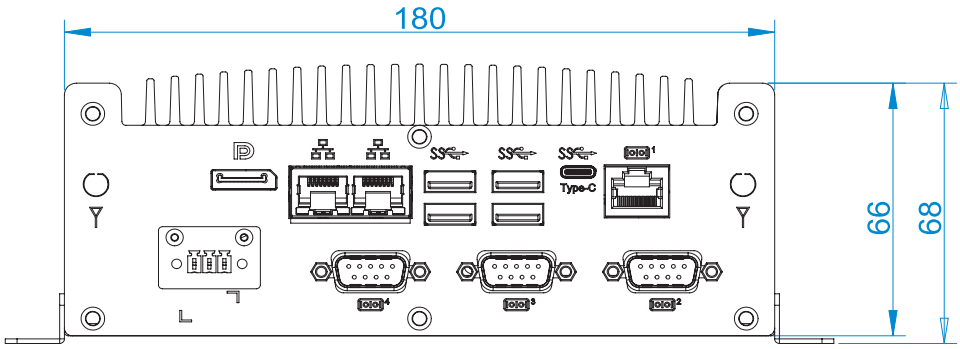
- Small FootPrint
- Alluminium construction
- Thermal Designed Fanless